The "small" automatic Ring Shear Tester RST-XS

Capabilities

The Ring Shear Tester RST-XS is an easy to operate tester for the precise determination of the flow properties of fine-grained powders and bulk solids. The sample volume amounts to only 3.5 to 70 ml (depending on the shear cell, standard size 30 ml). Therewith, the RST-XS is appropriate especially for those industries and research institutions which deal with fine-grained materials or which have only small amounts of powders for testing, e.g. the pharmaceutical industry, food industry, chemical industry and many others.

The Ring Shear Tester RST-XS provides computer-controlled measurement of the flow properties of powders and other bulk solid materials, under conditions which duplicate handling situations. Such properties are useful for many applications:

- Product development,
- Product characterization,
- Quality control,
- Comparative tests,
- Troubleshooting,
- Silo design.

Ring Shear Tester RST-XS

Why are flow properties important?

A material's flow properties determine how it will behave in bins, hoppers, feeders, and other handling equipment. Knowing these properties is essential in product development, so that flow problems can be avoided.

Flow properties are also important for quality control. By checking the relative flow properties of a given bulk solid before it is placed into your system, you can reject and recycle unsatisfactory batches, thereby preventing costly handling problems from occurring downstream.

What flow properties need to be measured?

The most important properties are those which are characterising the effort required for the initiation of flow. These are the cohesive strength and its increase with time ("caking"), internal friction, bulk density, and wall friction. While each of these parameters is affected by the material's particle size distribution, particle shape, surface characteristics, and moisture content, there is no direct correlation which allows these variables to be used to calculate the material's flow properties. Therefore, only those testers which directly measure the properties listed above should be considered.

Why choose the Ring Shear Tester RST-XS?

First, this is a real shear tester. This is important, since shear testers are the only internationally recognized means to measure the flow properties of powders and bulk solids. The RST-XS follows ASTM-6773 ("Schulze Ring shear Tester").

Second, this tester is easy to use, requiring minimal operator training and skill. In addition, the time required to test a material and analyze the results is also minimal.

Third, this tester requires only very small amounts of powder for testing (3.5 ml to 70 ml; 30 ml when the standard cell is used).

Fourth, this tester is extremely versatile. Materials which are free flowing, very poor flowing, or require large shear deformation can all be tested. The applied stress level can be varied over a wide range, consistent with how your material is being handled.

Testing procedure

The powder sample is contained in an annular trough, similar to the larger shear testers of the series RST-01 (see sketch on reverse side). A vertical load is applied through an annular lid. To shear the sample, the shear cell rotates relative to the lid, and the torque necessary for shearing is measured. Following a well-defined procedure, which is executed computer-controlled, the flow properties are measured.

The operation of the tester is limited to the filling of the shear cell, the placement of the cell on the tester, entering the test parameters to the computer and starting the test, and finally the cleaning of the shear cell.

The Ring Shear Tester RST-XS is controlled by the software RST-CONTROL 95 for MS Windows*. The software provides several modes of operation. Standard procedures can be used, where test parameters such as the consolidation stress are entered once. Thus, the operator can start a test just with some mouse clicks. For special applications a semi-automatic test mode is provided. Here the operator observes the measured data on the screen and controls the test via the PC keyboard or the mouse.

* Windows XP, Vista, and 7 are registered trademarks of Microsoft Corp., U.S.A.

Dr.-Ing. Dietmar Schulze
Schüttgutmesstechnik

Dr. Dietmar Schulze Schüttgutmesstechnik, Am Forst 20, 38302 Wolfenbüttel, Germany
phone ++49 5331 935 490, fax ++49 5331 978 001, E-Mail: mail@dietmar-schulze.com
For further information please visit our website: www.dietmar-schulze.com

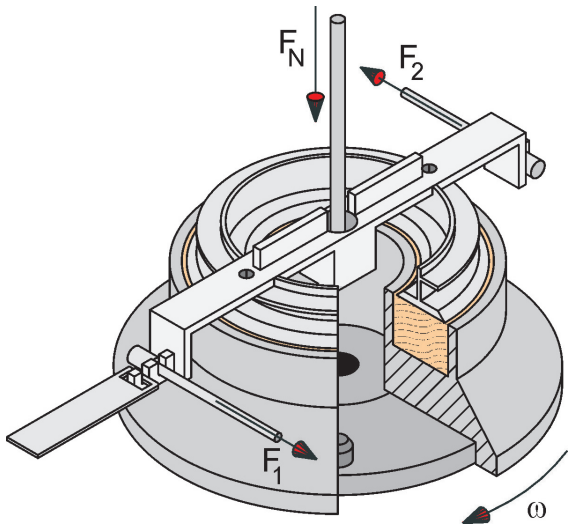

Cut-away view of the shear cell (type XS-Mr, approx. 30 ml)

Primary operational components

- **Automated load application** - The vertical load, F_N, as shown in the cut-away view, acting on the bulk solid sample is adjusted via computer commands, which direct a motor to shift weights on a lever arm (max. 20 kPa normal stress with standard shear cell). No weights need to be handled by the operator!
- **Digitally controlled motor drive for shear cell rotation** - Cell rotation, ω (see cut-away view), is also computer-controlled.
- **Twin load beam shear force measurement** - The shear force, F_1 and F_2 (see cut-away view), is automatically measured, and the output is viewed in real time via a computer (diagram).
- **Inductive displacement transducer measures sample height** - Bulk density is calculated and displayed during shear testing and compressibility testing.
- **Shear cell** - With the Ring Shear Tester RST-XS a standard shear cell is delivered (specimen volume 30 ml, see figure). Smaller and larger shear cells (3.5 ml, 9 ml, 70 ml) and a wall friction cell are available.

Shear cell approx. 30 ml, 2 EURO coin

Software

The control software RST-CONTROL 95 for MS Windows XP* and higher (with speech output for supporting the operator) serves for controlling the Ring Shear Tester ("Test on a mouse click") as well as for the automatic evaluation of the test results. The software package additionally contains the program RSV 95 for the detailed analysis of the test data and for the output of the results, e.g. as diagram, table or report, with the possibility to export the data/diagrams to other applications (e.g. word processor, spreadsheet).

RST-CONTROL 95 requires a PC with:

- Microsoft Windows XP/Vista/7*,
- Serial communication port COM1 or COM2,
- Screen resolution min. 1024x768,
- Sound card / speaker für speech output.

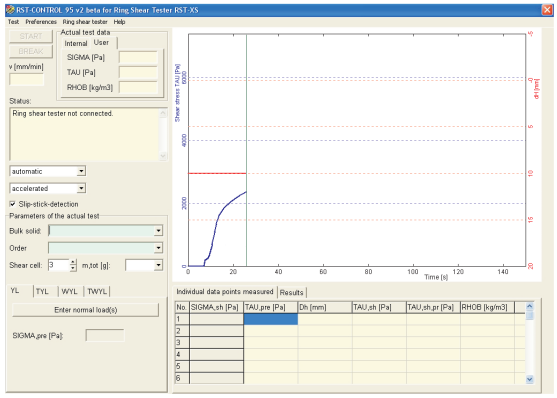

RST-CONTROL 95 (screen shot)

Dimensions

- Approx. 600 mm x 550 mm x 480 mm (W x H x D).
- Weight ca. 40 kg.

Ring Shear Testers series RST-01 and further products

Beside the automatic Ring Shear Tester RST-XS, which is characterized by small dimensions and sample volumes, the automatic Ring Shear Tester RST-01.pc with specimen volumes up to 900 ml is available. It can be used for testing materials with particle sizes up to some millimeters.

The new Ring Shear Tester RST-XS.s is even smaller and lighter than the RST-XS, and works with the same shear cell dimensions as the RST-XS. This new tester has an increased range of capabilities such as the measurement as very small stresses (down to about 50 Pa).

(c) 2002-2012 Dietmar Schulze. All rights reserved. Technical modifications, errors and misprints excepted.

Dr.-Ing. Dietmar Schulze
Schüttgutmesstechnik

Dr. Dietmar Schulze Schüttgutmesstechnik, Am Forst 20, 38302 Wolfenbüttel, Germany
phone ++49 5331 935 490, fax ++49 5331 978 001, E-Mail: mail@dietmar-schulze.com
For further information please visit our website: www.dietmar-schulze.com

03/2012

For customers outside of Europe, the tester is available through Jenike & Johanson, Inc. (U.S.A.). For additional information or pricing, contact them at (978) 649-3300, or by fax at (978) 649-3399, or by e-mail to test-equip12@jenike.com.